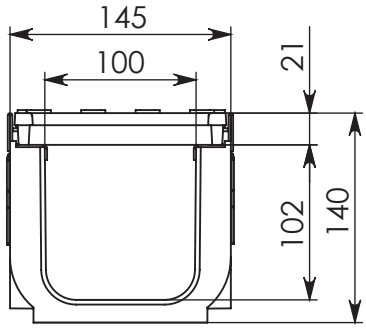
145
100
21
102
140

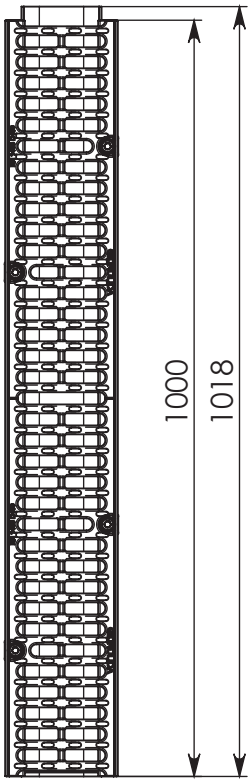
1000
1018

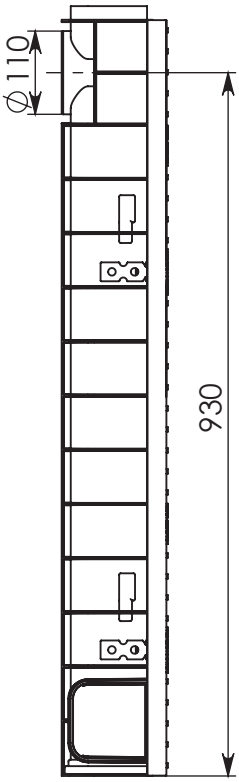
∅110
930